A Comparison of Three-Phase Uncoupled and Directly Coupled Interleaved Boost Converter for Fuel Cell Applications

R. Seyezhai[1] and B. L. Mathur[2]

[1]Associate Professor, Department of EEE, SSN College of Engineering, Chennai.
[2]Professor, Department of EEE, SSN College of Engineering, Chennai.
seyezhair@ssn.edu.in

Abstract: Interleaved boost converter is well suited for high power and high performance applications. This paper investigates the performance of three-phase uncoupled and directly coupled Interleaved Boost Converter (IBC) for fuel cell applications. By employing directly coupled inductors for IBC, the overall current ripple can be effectively reduced which increases the lifetime of fuel cells. In this paper, a three phase interleaved boost converter using CoolMOS and Silicon Carbide (SiC) diode has been proposed for fuel cells compared to the classical IBC reported in the literature. Mathematical analysis of overall current ripple and the design equations for IBC has been presented. Analysis based on the relationship between current ripples and operating conditions such as duty cycle and coupling coefficient has been investigated for uncoupled and directly coupled IBC. The performance parameter of IBC such as switching losses and efficiency has been studied. Simulation of IBC interfaced with Proton Exchange Membrane (PEM) fuel cells has been studied using MATLAB/SIMULINK. Experimental prototype has been built to validate the results.

Keywords: IBC, PEM fuel cell, uncoupled and directly coupled

1. Introduction

Interleaved boost converter is a promising interface between distributed energy sources such as fuel cells, PV, battery and the DC bus of inverters. Due to interleaving operation, IBC exhibits both lower current ripple at the input side and lower voltage ripple at the output side. Therefore, the size and losses of the filtering stages can be reduced, and switching losses can be significantly decreased [1]. But the structure of IBC has more inductors than the single phase converters, which increases the complexity of the converter. This is overcome by employing coupled inductor in IBC [2] which reduces the converter volume by using one core instead of two or more, to improve the regulation of power converters. This paper presents the comparison of two non-isolated DC-DC boost converters that can be interfaced with the PEM fuel cell: an uncoupled three-phase IBC with discrete inductors in each phase and a directly coupled IBC consisting of a single input inductor.

The performance of three-phase uncoupled and directly coupled IBC is investigated over the operating range of the PEM fuel cell. As input current ripple is highly objectionable for a fuel cell source, the proper design of IBC is important for increasing the life of the fuel cell as well as for improving the quality of the output power. Detailed analysis has been done to investigate the benefits of directly coupled inductors compared to the conventional uncoupled inductors. The input current and phase current ripples and losses has been compared for uncoupled and directly coupled IBC. In this paper, a three phase IBC with CoolMOS and SiC diode is suggested for fuel cells considering variation of input voltage, inductor and switching frequency.

Section II gives a description of the two IBC topologies that are to be compared in this paper. Section III presents the design equations of IBC for uncoupled and directly coupled and

Received: October 18th, 2010. Accepted: October 11st, 2011

Section IV presents the simulation results. Section V presents a prototype design and experimental validation of both converters.

2. Three-Phase Interleaved Boost Converter

The two boost topologies to be compared in this paper are presented in this section: a classical IBC with a single inductor per phase and a directly coupled IBC consisting of a single input inductor. Since inductor is the largest and heaviest component in a power boost converter, the use of a coupled inductor is preferred to achieve advantages such as reduced core and winding losses as well as improved input and inductor current ripple [2].

A. Uncoupled Interleaved Boost Converter

Figureure 1 shows the three-phase uncoupled IBC. The number of inductor and switch is same as the number of phases. However, the capacitor is common in IBC. Because the output current of fuel cell is divided by 1/N times separately, the current stress in IBC can be reduced. Each phase switching frequency of 3-phase IBC can be identical and each switch has same phase shift angle as 360°/N. According to the duty ratio, switching sequences of each phase can be overlapped or not. While IBC is operated at non-overlapped condition, the input current ripple is decreased. However, it is linearly increased after switching sequence is totally overlapped.

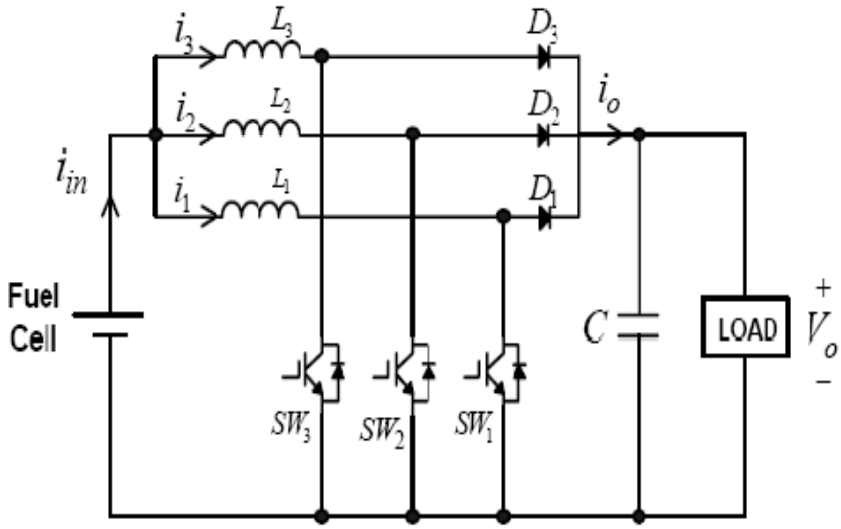

Figure 1. Circuit Diagram for 3- phase uncoupled IBC

This paper utilizes three phases since the ripple content reduces with increase in the number of phases. If the number of phases is increased further, without much decrease in the ripple content, the complexity of the circuit increases, thereby increasing the cost of implementation. Hence, as a tradeoff between the ripple content, cost and complexity the number of phases is chosen as three.

B. Directly Coupled Interleaved Boost Converter

Figure 2 shows the schematic diagram of the 3-phase interleaved boost converter with direct coupled inductors.

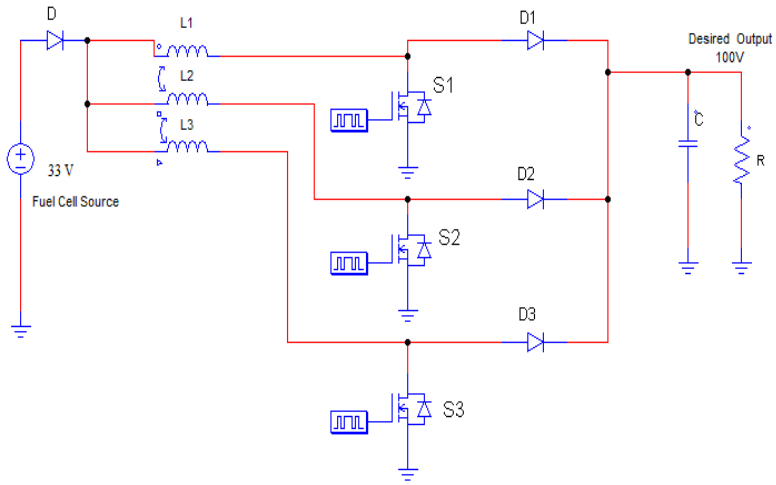

Figure 2. Circuit Diagram of Directly coupled IBC

Coupled inductor improves the efficiency and transient response of the converter. The input current ripple with coupled inductor topology is reduced as compared to the uncoupled inductor. This comparison is shown in Figureure3. But phase current ripple increases in directly coupled IBC. This ripple increases with the coupling coefficient. Therefore, coupling efficient should be carefully chosen, in order to reduce the overall input current ripple while satisfying the phase current ripple limits.

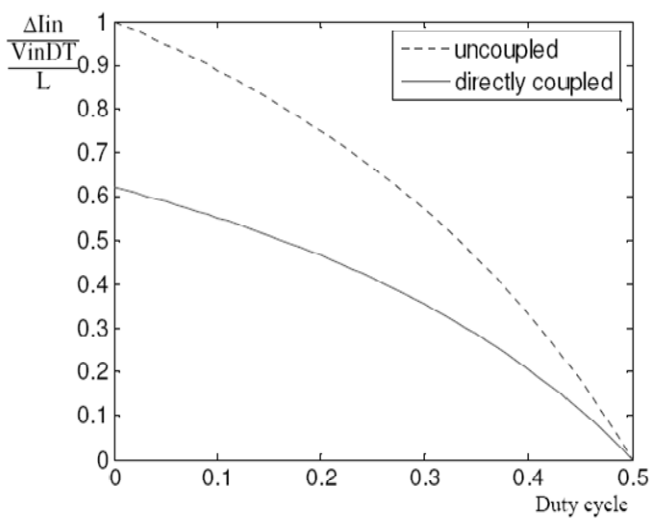

Figure 3. Input current ripple versus duty cycle for directly coupled and uncoupled inductors

3. Design Methodology for Three-Phase Interleaved Boost Converter

The interleaved boost converter design [3] involves the selection of the number of phases, the inductors, the output capacitor, the power switches and the freewheeling diodes. Both the inductors and diodes should be identical in all the channels of an interleaved design. In order to select these components, it is necessary to know the duty cycle range and peak currents. Since the output power is channeled through 'n' power paths where 'n' is the number of phases, a good starting point is to design the power path components using 1/n times the output power. The steps involved in designing IBC are as follows:

- Decision of duty ratio and number of phases
- Selection of power semiconductor switches
- Selection of inductor values
- Design of output filter

A. Decision of Duty Ratio and Number of Phases

For a specific input and output voltages and power rating of the converter, the duty ratio is calculated as

$$D = \frac{V_o - V_{in}}{V_o} \tag{1}$$

The input current ripple and the output voltage ripple for various duty ratios are shown in Figures 4 and 5.

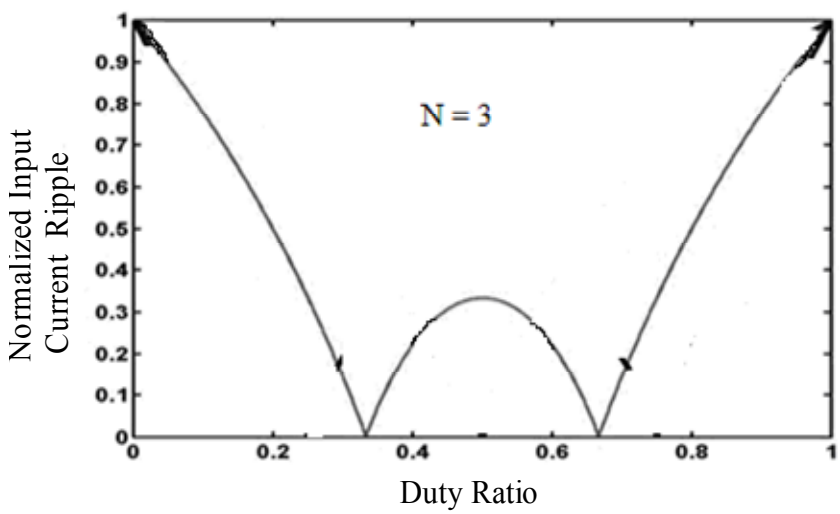

Figure 4. Input current ripple for various duty ratios

Lower output voltage ripple results in lowering the output capacitance requirements. Therefore, the duty ratio is chosen as 0.67 and the number of phases for IBC as three so as to get reduced input current ripple and keep the inductor current ripple within limits. Compared to uncoupled inductor, the input current ripple is reduced for directly coupled IBC [4]. Figureure6 shows the switching pattern and voltage and current waveforms for IBC.

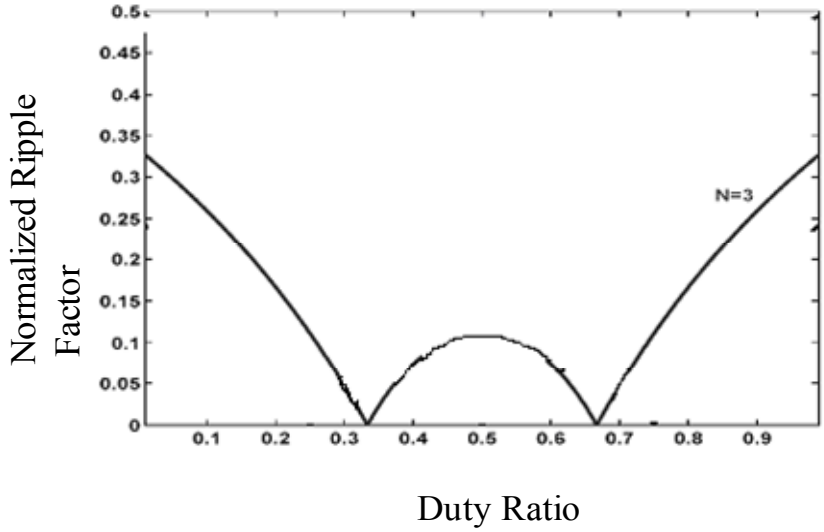

Figure 5. Output voltage ripple for various duty ratios

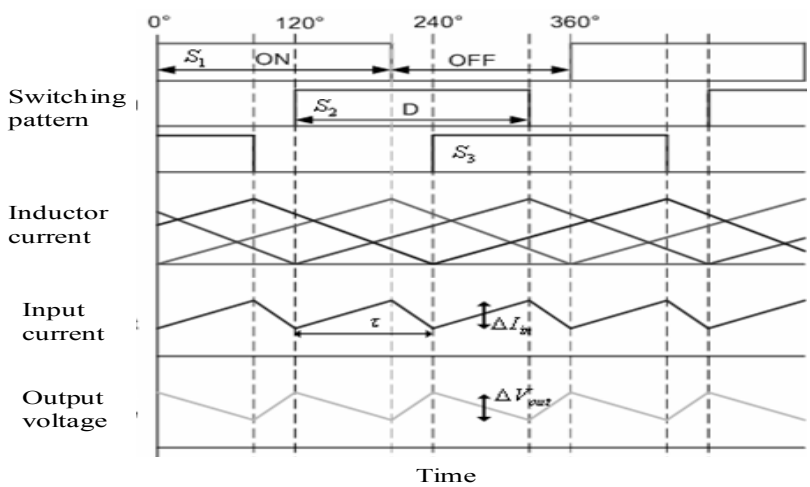

Figure 6 Switching pattern and voltage and current waveforms of 3-Phase IBC

B. Selection of power semiconductor switches

The semiconductor devices chosen for constructing the 3-phase interleaved boost converter is the CoolMOS transistor and SiC diode. The main benefits of CoolMOS (IXKN75N60C) are lower on-state résistance, lower conduction losses and high switching operation. The performance of CSD100060 SiC Schottky diode is compared with that of MUR1560 Si diode for IBC using PSPICE. The SiC diode has less forward voltage, high reverse breakdown voltage and less reverse recovery current which results in reduced switching loss. Due to absence of reverse recovery current, there is no need of active snubber circuit for protection. Significant reduction in switching loss can be achieved if the CoolMOS is used together with SiC diode compared with IRFP460A MOSFET. Hence, the proper choice of semiconductor switches is important in improving the performance of the converter.

C. Selection of Inductor values

Design of inductance is very important in boost topologies so that the inductor is sized correctly [7,8]. The design of inductors for uncoupled and directly coupled IBC is explained as follows:

C.1. Design of inductance value for uncoupled IBC

The inductor is designed with a ferrite EE core. Each leg of the converter is switched at a frequency of 10 kHz with a phase shift of 120 degrees. The inductor value is calculated using the expression of input current ripple which is given by (for 0.67 < D < 1)

$$\Delta I_{in} = \frac{V_{in} DT}{L} \frac{1-3D}{1-D} \tag{2}$$

where ΔI_{in} represents the input current ripple, D represents the duty cycle , T represents the switching period and L represents the inductance value.

C.2. Design of inductance value for directly coupled IBC

The expression for equivalent inductance L_{eq} for directly coupled IBC is

$$L_{eq} = \frac{V_{in} DT}{\Delta I_{phase}} \tag{3}$$

ΔI_{phase} (phase current ripple) which is decided by L_{eq} is given by

$$\Delta I_{phase} = \frac{V_{in} DT}{L} \frac{1+\alpha+2\alpha\frac{D}{1-D}}{1+\alpha-2\alpha^2} \tag{4}$$

To find out the values of mutual inductance L_m and leakage inductance L_k, the input current is calculated using the input voltage and power. With a coupling coefficient (α) of 0.61, the minimum self-inductance of the coupled inductor is found as

$$L = \frac{1+\alpha\frac{D}{1-D}}{1+\alpha-2\alpha^2} L_{eq} \tag{5}$$

The values of the L_m and L_k are calculated as

$$L_m = \alpha L \tag{6}$$

$$L_k = (1-\alpha) L \tag{7}$$

Therefore, the overall input current ripple is derived as

$$\Delta I_{in} = \frac{V_{in}\,DT}{L}\left(\frac{(1-\alpha)\left(1-\frac{2D}{1-D}\right)}{1+\alpha-2\alpha^2}\right) \tag{8}$$

From equation (8), it is clear that increasing the value of the coupling coefficient can effectively reduce the input current ripple but the phase current ripple is increased. Therefore, the value of coupling coefficient is carefully chosen as 0.61 so that the input current ripple is reduced and the phase current ripple is within the limits. For a given input voltage, the mutual flux density for the coupled inductor is dependent on duty cycle. So, a proper choice of duty ratio and coupling coefficient is important in order to reduce the input current ripple and to keep the inductor current ripple within limits [5,6]. Using equations (2) to (8), the inductance value is calculated.

D. Design of Output Filter

A capacitor filter is needed at the output to limit the peak to peak ripple of the output voltage. The capacitance of the output filter is function of the duty cycle, frequency and minimum load resistance during maximum load [7,8]. The value of the capacitance is given by the formula:

$$C = \frac{V_o\,DT}{R\,\Delta V_o} \tag{9}$$

where, 'R' represents the load resistance, ΔV_o represents the output voltage ripple.

4. Simulation Results

In order to examine the performance of 3-phase IBC, a comparative simulation for the three-phase uncoupled IBC and directly coupled IBC has been carried out with the following system parameters as shown in Table 1:

Table 1. Simulation Parameters for 3-phase uncoupled and directly coupled IBC

Parameters	Values
Input Voltage	33
Output Voltage	100V
Switching Frequency	10kHz
Duty Ratio	0.67
Inductance, L	6mH
Mutual Inductance	3.5mH (for directly coupled IBC)
Capacitance	100uF

Table 2. Comparison of uncoupled and directly coupled IBC

Parameters	Uncoupled IBC	Direct coupled IBC
Input current ripple	0.12 %	0.04 %
Inductor current ripple	5.1 %	7.8 %
Output voltage ripple	0.03 %	0.03 %

From Table 2, it is obvious that for directly coupled inductors, input current ripple is lesser compared to uncoupled inductors. Therefore, the directly coupled IBC is a suitable interface for fuel cell applications compared to uncoupled as it gives a reduced input current ripple and a better performance.

A. Switching Loss Calculation for IBC

The combination of CoolMOS transistor and SiC diode for the proposed IBC topology results in a reduced switching loss compared to IRFP460A MOSFET and Si diode. Switching loss for the main power device is calculated based on the equation given below:

$$P_{sw} = \frac{1}{2} V_o \frac{I_{in}}{N} \left(t_{on} + t_r + t_{off} + t_f \right) f_s \tag{10}$$

where, P_{sw} represents the switching loss of the main power semiconductor device, N represents the number of phases, f_s represents the switching frequency, I_{in} represents the current through the device, V_o represents the voltage, t_{on} represents the turn-on time of the device, t_{off} represents the turn-off time of the device, t_r represents the current rise time, t_f represents the voltage fall time.The simulated turn-on time, turn-off time and switching energy for CoolMOS transistor and IRFP460A MOSFET is shown in Table 3.

Table 3. Comparison of turn-on, turn-off time and switching energy for CoolMOS and IRFP460A MOSFET (simulation results)

Parameter	IRFP460A MOSFET	CoolMOS Transistor
Turn-on time	120ns	120ns
Turn-off time	550ns	400ns
Switching Energy	500uJ	310uJ

From Table 3, the simulation results shows that CoolMOS transistor has lower switching energy compared to MOSFET.

The diode switching loss is given by

$$P_{swD} = \frac{1}{2} V_o \frac{I_{RM}}{N} t_{rr} \; f_s \tag{11}$$

where, P_{swD} represents the diode switching loss, V_o represents the voltage, N represents the number of phases, t_{rr} represents the reverse recovery time, I_{RM} represents the peak reverse recovery current, f_s represents the switching frequency [10,11]. The SiC diode chosen for IBC has high reverse breakdown voltage, less reverse recovery current, less reverse recovery time and the simulated results are shown in Table 4.

Table 4. Comparison of I_{rr} and t_{rr} for Si and SiC diode

Parameter	Si Diode	SiC Diode
Reverse recovery current (I_{rr})	100A	20A
Reverse recovery time (t_{rr})	60ns	20ns

Table 4 shows that SiC Schottky diode has less reverse recovery time compared to the conventional Si diode.

5. Experimental Prototype of 3- phase IBC

A prototype of a 3- phase directly coupled IBC has been designed as shown in Figureure7 in order to verify the simulation results. The hardware set-up consists of the main power circuit, PIC microcontroller board for pulse generation and power supply circuit for optocouplers. The main power circuit consists of three boost converters in parallel with CoolMOS transistors and SiC diodes. The optocoupler 6N137 is used to isolate the power circuit from the PIC microcontroller circuit. PIC18F4550 is employed to generate the pulses required to trigger the CoolMOS transistor .

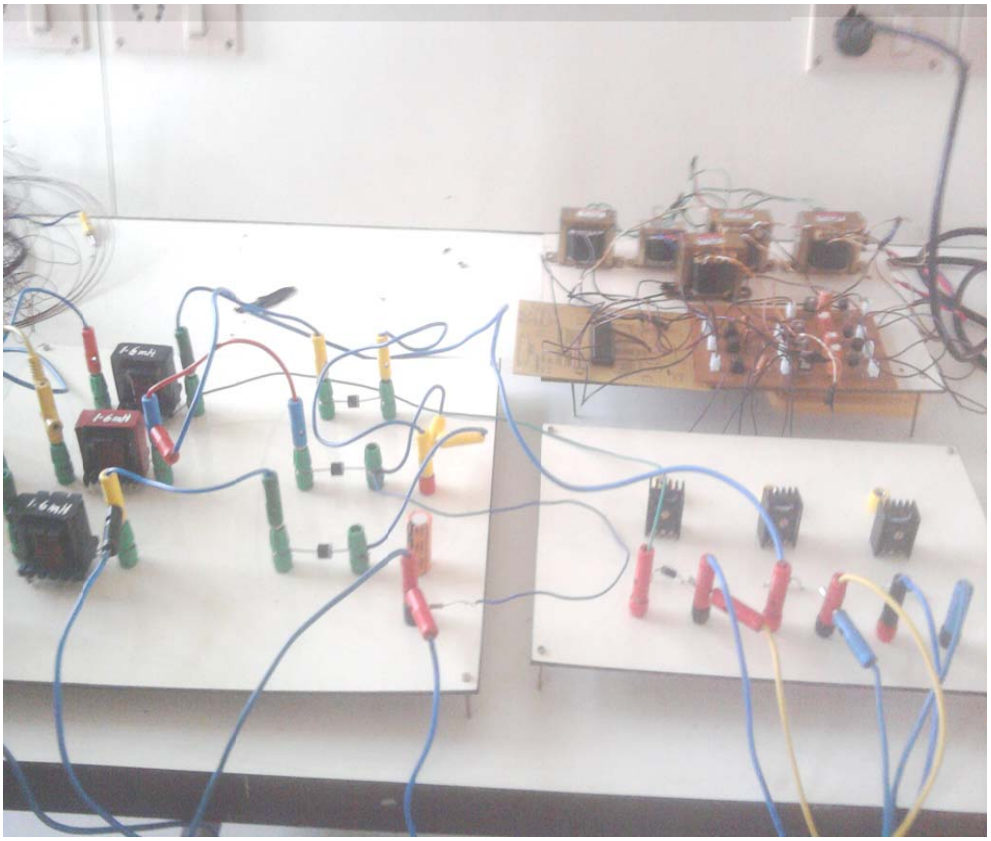

Figure 7. Experimental prototype of 3-phase IBC

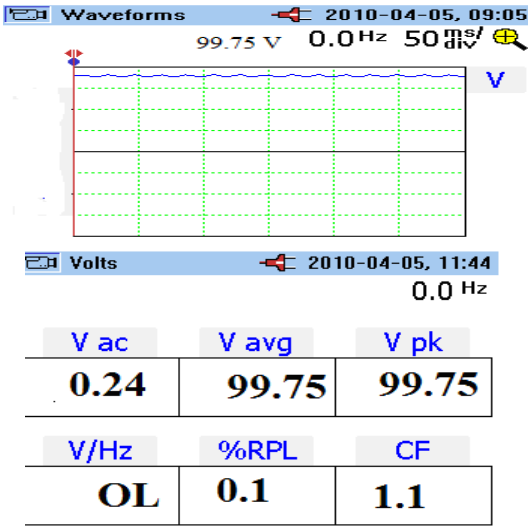

Figure 8. Output voltage ripple and ripple factor (directly coupled IBC)

Figures 8 and 9 show the ripple in output voltage and input current.

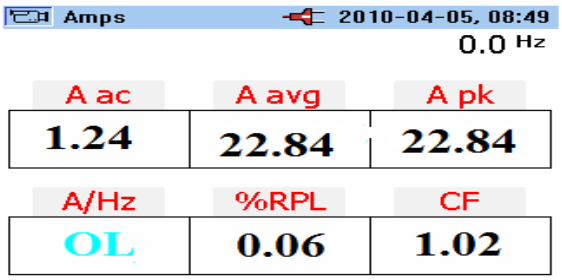

Figure 9. Ripple factor for input current ripple (directly coupled IBC)

Figure 8 shows the output voltage ripple equal to 0.1% which is well below the designed ripple of 2%. Thus the filter designed performs well compared to the conventional boost converter for fuel cell applications. The input current ripple is about 0.06%. The input current ripple is directly proportional to input voltage and inversely proportional to inductance and frequency. Therefore, frequency and inductance should be increased for the ripple reduction for the design of IBC.

Figure 10 shows the inductor current ripple which is below the designed value (10.2 %). The ripple increases dramatically with coupling coefficients above 0.65.Therefore, in this study, the coupling coefficient is chosen as 0.61.

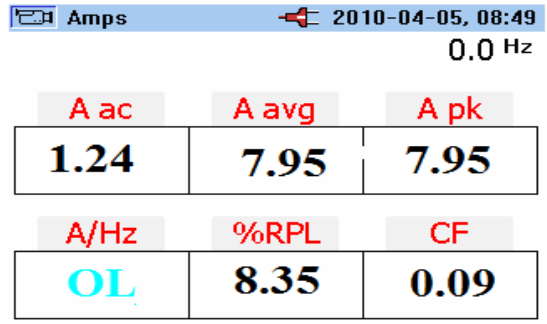

Figure 10. Ripple factor for inductor current ripple (directly coupled IBC)

Figure 11 shows the inductor current ripple for uncoupled IBC which is less than the directly coupled IBC. This ripple is dependent on the value of duty ratio and coupling coefficient. So, proper value of coupling coefficient will lead to reduction in inductor current ripple thereby improving the efficiency of the converter.

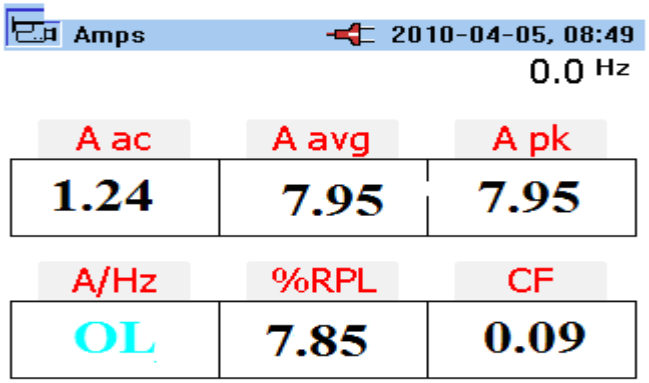

Figure 11. Ripple factor for inductor current ripple (uncoupled IBC)

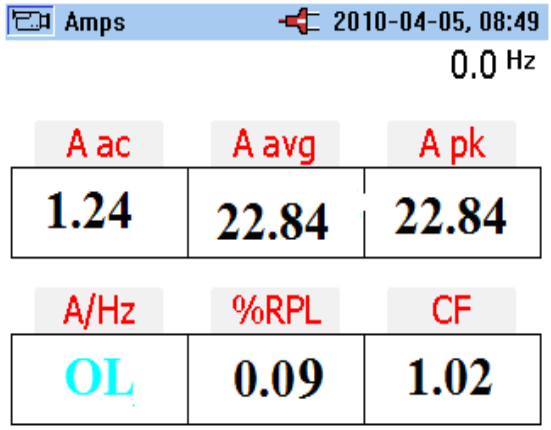

Figure 12. Ripple factor for input current ripple (uncoupled IBC)

Figure 12 shows the input current ripple which is higher than the directly coupled IBC. This higher value of ripple will reduce the lifetime of fuel cell resulting in increased flow rate of hydrogen thereby reducing the efficiency of fuel cell. Therefore, directly coupled IBC is a better choice for fuel cells.

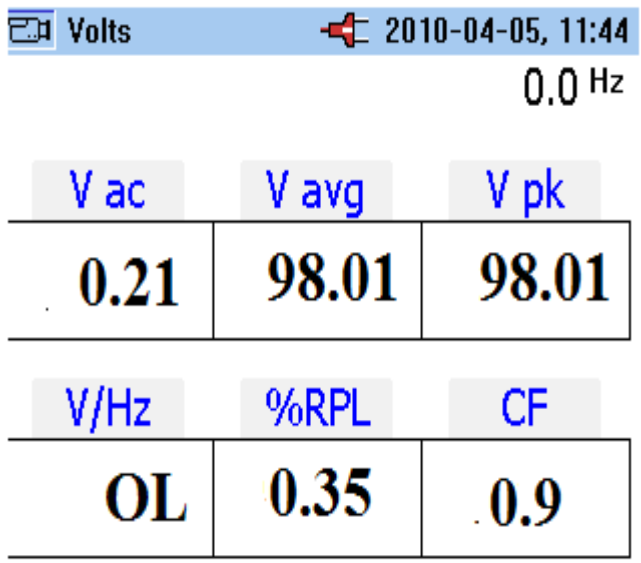

Figure 13. Ripple factor for output voltage ripple (uncoupled IBC)

Figure13 shows the output voltage ripple for uncoupled IBC which is again higher than that of directly coupled IBC. This leads to increased filtering requirement at the output of the converter. Therefore, directly coupled IBC results in reduced output voltage ripple which is well suited for fuel cells.

Table 4. compares the simulation and experimental results for uncoupled and directly coupled IBC. The results indicate that the directly coupled IBC gives a reduced input current ripple which is best suited for fuel cell applications.

Table 4. Simulation and experimental results for uncoupled and directly coupled IBC

Parameters	**Uncoupled IBC**	**Directly Coupled IBC**
	Experimental Results	**Experimental Results**
Input Current ripple	0.09 %	0.06 %
Inductor current ripple	7.85 %	8.35 %
Output voltage ripple	0.35 %	0.1 %

6. Conclusion

This paper has investigated the performance of three-phase uncoupled and directly coupled IBC for fuel cells. The relationship between phase current ripple, input current ripple versus duty ratio and coupling coefficient is analyzed. The design equations for IBC have been presented. It is found that the directly coupled IBC effectively reduces the overall current ripple compared to that of uncoupled inductors. The choice of SiC diode and CoolMOS transistor for IBC has led to reduced switching losses. From these results, three-phase directly coupled IBC with CoolMOS transistor and SiC diode proves to be a good candidate for fuel cell interface.

References

[1] P. A. Dahono, S. Riyadi, A. Mudawari and Y. Haroen, ‘‘Output ripple analysis of multiphase DC–DC converter’’. *IEEE Int.Conf. Power Electrical and Drive Systems, Hong Kong*, pp. 626–631, 1999.

[2] H. Kosai, S. McNeal, Austin Page, Brett Jordan, Jim Scofield and B. Ray, ‘Characterizing the effects of inductor coupling on the performance of an interleaved boost converter,’ *Proc. CARTS USA* 2009, pp. 237–251, 2009.

[3] Gyu-yeong choe, S. K. Hyun and W. Y. Lee, ‘Design consideration of Interleaved Converters for fuel cell applications’, *Int. Conf. Electrical Machines and Systems, Seoul,* pp.238 -243, 2007.

[4] H. Xu, E. Qiao, X. Guo, X. Wen and L. Kong , ‘Analysis and Design of High Power Interleaved Boost Converters for Fuel Cell Distributed Generation System’, *Int. Conf. IEEE Power Electronics Specialists Conference (PESC)*, pp. 140 – 145, 2005.

[5] P. Lee, Y. Lee, D. K. W. Cheng and X. Liu, ‘Steady-state analysis of an interleaved boost converter with coupled inductors’. *IEEE Trans. Industrial Electronics*, pp. 787–795, 2000.

[6] R. J. Wai and R. Y. Duan , ‘High step-up converter with coupled-inductor,’ *IEEE Trans. Power Electronics*, Vol. 20, No.5, pp. 1025-1035, 2005.

[7] H. B. Shin, J. G. Park, S. K. Chung, H. W. Lee and T. A. Lipo, ‘Generalized Steady-State Analysis of Multiphase Interleaved Boost Converter with Coupled Inductors,’ *Proc. IEE Electronics Power Application*, Vol. 152, No. 3, pp. 584-594, 2005.

[8] Laszlo Huber, T. Brian Irving and M. Milan Jovanović, ‘Closed-Loop Control Methods for Interleaved DCM/CCM Boundary Boost PFC Converters,’ Int. Conf. *IEEE Applied Power Electronics, Washington*, pp. 991-997, 2009.

[9] P. Thounthong, P. Sethakul, S. Rael and B. Davat, “Design and implementation of 2- phase interleaved boost converter for fuel cell power source,’ *Int. Conf. Power Electronics, Machines, and Drives, PEMD* 2008, pp. 91–95, 2008.

[10] M. Veerachary, T. Senjyu and K. Uezato, ‘Modeling and analysis of interleaved dual boost converter’, *Int. Conf. IEEE International Symposium on Industrial Electronics*, Vol. 2, pp 718 – 722, 2001.

[11] M. Veerachary T. Senjyu and K. Uezato, “Small-signal analysis of interleaved dual boost converter”, *Int. Journal of circuit theory and applications*,Vol. 29, Issue 6, pp. 575 -589, 2001.

R. Seyezhai obtained her B.E. (Electronics & Communication Engineering) from Noorul Islam College of Engineering, Nagercoil in 1996 and her M.E in Power Electronics & Drives from Shanmugha College of Engineering, Thanjavur in 1998 and Ph.D from Anna University, Chennai, in 2010. She has been working in the teaching field for about 12 Years. She has published 50 papers in the area of Power Electronics & Drives. Her areas of interest include SiC Power Devices, Multilevel Inverters, DC-DC Converters and modeling of fuel cells.

B. L. Mathur obtained his B.E. (Electrical Engineering) from University of Rajasthan, in 1962 and his M.Tech in Power Systems from IIT, Bombay in 1964.He completed his Ph.D. in 1979 from IISc, Bangalore. His Ph.D. thesis was adjudged as the best for application to industries in the year 1979 and won gold medal. He has been working in the teaching field for about 44 Years. He takes immense interest in designing Electronic circuits. He has published 50 papers in National and International journals and 85 in National and International conferences. His areas of interest include Power Devices, Power Converters, Computer Architecture and FACTS.