Practical Implementation of a Proposed MPPT Control Strategy to Mitigate Inaccurate Responses for Photovoltaic Systems

Salah NECAIBIA[1], Mounia Samira KELAIAIA[1], Hocine LABAR[1], Ammar NECAIBIA[2], Okba DJELAILIA[1], and Faycel MERAD[1]

[1]Department of Electrical Engineering, Faculty of Engineering Science, Badji Mokthar University, BP 12 Sidi Amar, 23000 Annaba, Algeria
[2]Unité de Recherche en Energies Renouvelables en Milieu Saharien, URERMS, Centre de Développement des Energies Renouvelables CDER 01000, Adrar, Algeria

Abstract: In recent years, the solar energy has been considered as one of principal renewable energy sources for electric power generation. However, the maximization of extracted power from PV system is a matter of concern as its conversion efficiency is low. Therefore, a maximum power point tracking (MPPT) controller is necessary in a PV system for maximum power extraction. This paper presents a new Maximum Power Point Tracking (MPPT) algorithm for Photovoltaic (PV) systems. The new method combines a novel strategy to identify the global maximum power point. In the proposed PV-MPPT system, a new control strategy creates two operating areas. In these two areas, the step-size changes adaptively from small step to large step. Thanks to this strategy all the drawbacks of the conventional technique have been eliminated. A SEPIC DC–DC converter was applied and controlled with MPPT techniques. The modified Incremental Conductance (IncCond) method is validated by simulation under real scenario of solar irradiation. Compared with conventional method, simulation results demonstrate the highest MPPT efficiency and the shortest convergence time of the proposed MPPT method even under fast changing of solar radiation.

Keywords: Conventional Incremental Conductance (IncCond) algorithm; Maximum Power Point Tracking (MPPT); Photovoltaic (PV) System; DC-DC Converter;

Nomenclature:
$\mathbf{R_s}$ and $\mathbf{R_p}$: Series and parallel resistances, respectively ;
$\mathbf{I}$, $\mathbf{I_{pv}}$ **and** $\mathbf{I_s}$: Cell output current, cell photocurrent and cell reverse saturation current respectively;
$\mathbf{N_p}$ **and** $\mathbf{N_s}$: Number of cell connected in parallel and in series respectively;
k: Boltzmann constant;
T: Temperature in degrees Kelvin;
V: Cell output voltage;
q: Electron charge.
$\mathbf{k_i}$: Short-circuit current temperature coefficient;
$\mathbf{T_r}$: Cell reference temperature;
S: Solar irradiation W/m².
$\mathbf{I_{so}}$: Reverse saturation at $\mathbf{T_{ref}}$;
$\mathbf{E_g}$: Band-gap energy of cell's semiconductor;
A: Dimensionless junction material factor;
$\boldsymbol{V_{oc}}$: Open circuit voltage;
$\boldsymbol{I_{sc}}$: short-circuit current;
$\mathbf{V_m}$: Maximum PV voltage;
$\boldsymbol{I_m}$: Maximum PV current ;
$\boldsymbol{P_m}$: Maximum PV power;

Received: August 9th, 2017. Accepted: December 25th, 2018
DOI: 10.15676/ijeei.2018.10.4.10

$\mathbf{V_{pv}}$, $\mathbf{I_{pv}}$ and $\boldsymbol{P_{pv}}$: PV voltage, current and power respectively;
$\boldsymbol{V_{out}}$, $\boldsymbol{I_{out}}$ and $\boldsymbol{P_{out}}$: SEPIC output voltage, current and power respectively;
D : Duty ratio;

1. Introduction

The Photovoltaic (PV) technology plays a significant role in the global electric power generation. It is expected that more than 45% of the world energy demand will be supplied from solar energy technologies, specifically photovoltaic technologies [1] and with the decrease in the it is capital cost seen the in last decade [2]. PV technologies may be the main sources of renewable energy in the future.

However, the photovoltaic systems have still to improve its overall efficiency which is dependent on the technology generation efficiency and the impact of the variable and the variable weather parameters. Furthermore, the PV panels output is characterized by their I-V and P-V curves [3]. Due to the non-linear I−V and P−Vcurves of PV panel, the PV characteristic curves are affected by the local weather condition, mainly solar radiation intensity and ambient temperature. The dynamic load profile may result in a mismatch between the load characteristics and the Maximum Power Point (MPPs) of the PV panel. In order to resolve the demand and MPP, tracking system where implemented to ensure PV system are operating at MPP, which is the optimal operating point[1].

Many methods to track the MPP have been developed and implemented. These methods vary according to their complexity, required sensors, time convergence, cost, range of effectiveness, implementation hardware, popularity and hence has been categorized from the great simplicity to the most creativity [4]. In general, all MPPT methods can be classified to either an indirect or direct methods. The indirect methods, such as, open-circuit and short-circuit methods implement mathematical concepts that do not consider the weather parameters, hence, cannot accurately track the MPP of PV module at different weather conditions. On the other hand, the direct methods can track the MPP at any meteorological conditions, such as, Perturb and Observe (P&O), Incremental Conductance (IncCond) which is the most used method for MPPT and devices using this method can be found commercially. These Commercial devices generally using the perturbative MPPT methods [5].

The recent researches have been concentrated on new methods such as fuzzy logic [6][7] neural networks [8][9] and Takagi-Sugeno [10] to obtain a variable step. These techniques require 9 to 49 rules in the rule table which are in function on the numbers of linguistic variables in input membership functions (MFs). For this reason, these techniques have significant difficulty in implementation. therefore, they are not suitable for cost-sensitive systems[11].

In this paper a widely IncCond Technique is used because of its easiest of implementation and no requirement of periodic tuning [12]. The performance of the IncCond technique is determined by the convergence time toward the MPP and steady-state perturbations which depends on the step-size of perturbation. Smaller step-size causes in lower perturbation but results in slow response time. While large step-size increases the steady-state perturbation [13].Under rapidly changing of solar irradiance, the performance of this method is degraded [14]. The objective of this paper is to design a low-cost and high-performance MPPT technique. A modified IncCond algorithm is proposed to mitigate inaccurate responses under non-uniform insolation conditions. The two MPPT techniques: conventional IncCond method and proposed method are simulated in the Matlab/Simulink environment. A comparative study between the two algorithms has been presented and discussed.

2. Modeling of a PV System Supply

A. Modeling of PV Module

The photovoltaic system consists of several elements, including the PV panel, which is considered as the most important element of this structure. The PV panel is constituted of solar cells, which in general, produces a voltage between 0.5 and 0.8 volts, based on the semiconductor technology and the material used. The connection of several solar cells form the PV-module

[15]. The I−V characteristic of a PV-module approached by a one diode model could be described as follows: [16][17]:

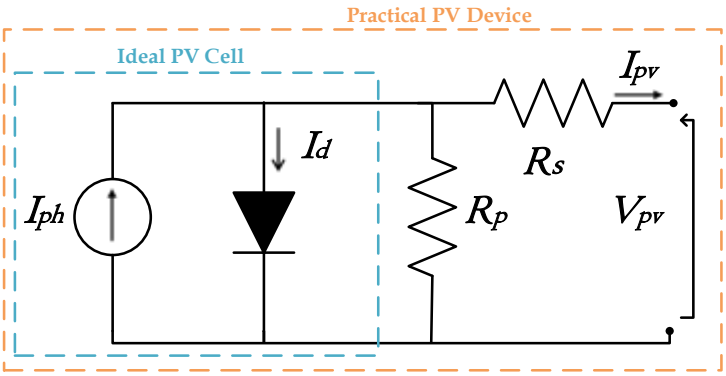

Figure 1. Equivalent circuit of photovoltaic cell.

$$I_{pv} = N_p I_{ph} - N_p I_s \left\{ e\left[\frac{q(V_{pv}+R_s I_{pv})}{N_s\, AKT}\right] - 1 \right\} - N_p \frac{q(V_{pv}+R_s I_{pv})}{R_p\, N_s} \quad (1)$$

The photocurrent of PV module is depending on the ambient temperature and irradiance, as given below:

$$I_{ph} = [I_s + k_i(T - T_r)]\frac{S}{100} \quad (2)$$

Where

$$I_s = I_{so} * \left(\frac{T}{T_r}\right)^3 * e\left[\left(-\frac{q.E_g}{A.K}\right) * \left(\frac{1}{T_r} - \frac{1}{T}\right)\right] \quad (3)$$

and $A = \frac{q(V_{pv}+R_s I_{pv})}{N_s}$

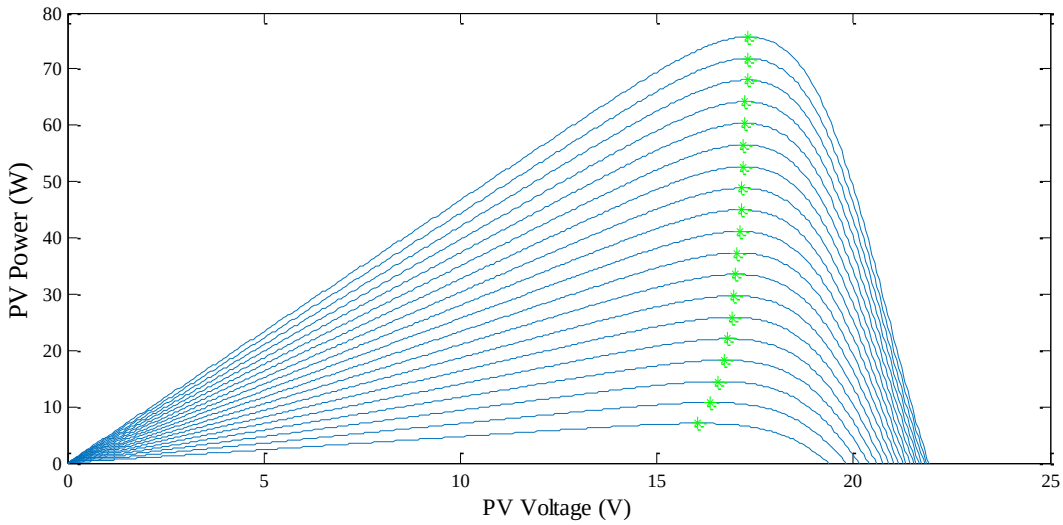

Figure 2. Positions of V_m and I_m with different levels of irradiation in both (a) $P - V$ curve and (b) $I - V$ curve: effect of irradiation.

Electrical characteristics of PV-module are given by manufacturers in specific operating conditions, which are worldwide defined as standard test conditions (STC) (cell temperature: 25˚C and irradiation: 1000 W/m²) Tab. 1. The most important disturbance factor is the variation in solar

irradiation due to its unpredictability. This effect will be discussed in detail in this paper. The irradiation variation has dual effects on the characteristics with respect to the cell temperature. The V_{oc} is almost independent of the irradiation: in literature it is mentioned that such a dependence is logarithmic. On the contrary, the I_{sc} is linearly dependent on the solar irradiation. Figure 2 shows the relationship of P_{pv} and I_{pv} versus V_{pv} of ISOFOTON IS-75/12 PV module with different values of the solar irradiation.

Table 1. The PV Module's parameters (ISOFOTON IS-75/12).

Parameters	Variable	Value
Maximum power	P_m	75 $[W]$
Maximum voltage	V_m	17.3 $[V]$
Current at max power	I_m	4.34 $[A]$
Open circuit voltage	V_{oc}	21.6 $[V]$
Short circuit current	I_{sc}	4.67 $[A]$
Series resistance	R_s	0.221 $[\Omega]$
Parallel resistance	R_p	866.923 $[\Omega]$
Number of series cells	N_s	36

B. DC–DC SEPIC Converter

Photovoltaic systems are almost always associated with power converters. Even in the case of a direct connection between a PV-module and a battery, a non-return diode is needed. Mainly, power converters are needed in order to adapt the electrical frequency and voltage level to the planned use. DC-DC converters are the most popular used in PV systems, because it has a simple structure which allows easily changing the linked impedance between the PV panel and the load by changing the duty cycle, which affects the operating point of the PV-module. The SEPIC converter Figure 3 has been selected to play an effective role based on its higher conversion efficiency; it is very fitting for a broad scale of input voltage values. In fact, the output/input voltage rate is in the Continuous Inductor Mode (CIM) [18].

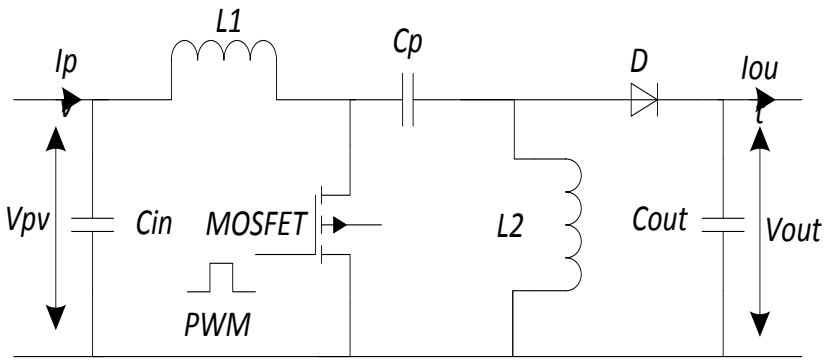

Figure 3. SEPIC Converter.

The MOSFET is controlled through a duty cycle. The mathematical expressions needed for the SEPIC converter are given by the following equation[19].

$$V_{out} = V_{pv}\frac{D}{1-D} \tag{4}$$

When the conversion of power is perfect, the input power is equal to the output power as

$$P_{pv} = P_{out} \tag{5}$$

$$V_{pv}I_{pv} = V_{out}\, I_{out} \tag{6}$$

By substituting (4) into (6)

$$I_{out} = I_{pv}\frac{1-D}{D} \tag{7}$$

Where V_{pv} and I_{pv} are respectively output voltage and current of PV Panel, V_{out} and I_{out} are the output voltage and current of SEPIC converter and D the duty cycle of switch control. MOSFET is turned-on for time T_{on} and then turned-off for time T_{off}. The process of turning on and off is repeated continuously with a period $T = T_{on} + T_{off}$ .Hence, the switch duty ratio D could be defined as:

$$D = \frac{T_{on}}{T_{on}+T_{off}} \tag{8}$$

Table 2.Components of the SEPIC converter.

Parameters	Variable	Value
Input capacitor	C_{in}	2200 µF
Inductor	$L_1 = L_2$	274 µH
Output capacitor	C_{out}	2200 µF
coupling capacitor	C_P	1000 µF
Switching frequency	f_{SW}	20 kHz

3. Maximum Power Point Algorithm

The use of the MPPT can maximize the energy produced from the PV-module and passes it on to the load [15]. In this work, the SEPIC converter is the main impedance adaptation circuit between the load and the PV panel. To maximize the energy harvesting, it is necessary to operate at the MPP. The PV-module is connected a DC–DC SEPIC converter to increase the voltage level and to operate at the desired current and desired voltage to match the maximum available power from the PV-module.

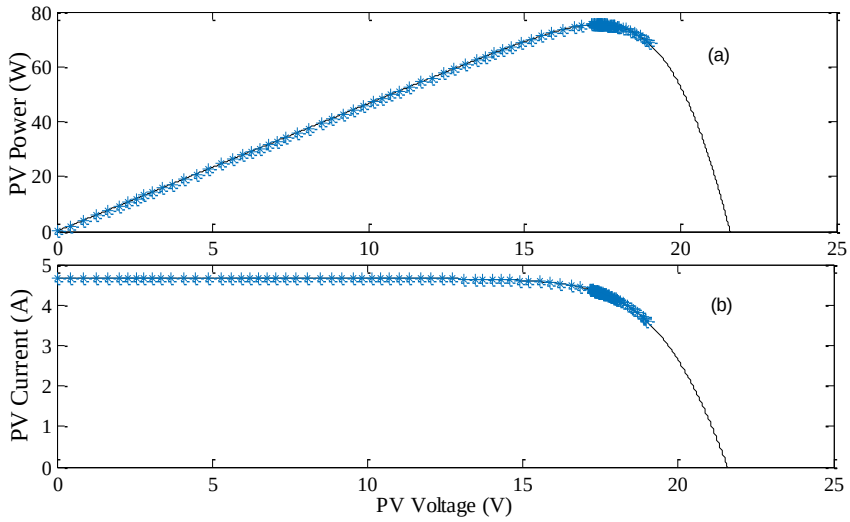

Figure 4. Tracking the MPP through a SEPIC converter for both (a) $P - V$ curve and (b) $I - V$ curve.

A. *Conventional Incremental Conductance Algorithm*

Incremental Conductance technique is mostly used by researchers. Indeed, it is simple to implement compared to the other methods; however, still needed for some improvements in order to achieve the advantage given by the other methods[20].it is based on the slope of the PV panel power curve as explained by the following equation [21] [22] [23].

$$\frac{dP}{dV} = 0 \tag{9}$$

This Equation can be rewritten as:

$$\frac{dP}{dV} = \frac{d(I.V)}{dV} = \frac{V.dI}{dV} + \frac{I.dV}{dV} \tag{10}$$

$$\frac{dP}{dV} = V\frac{dI}{dV} + I \tag{11}$$

Which implies that

$$\frac{dI}{dV} + \frac{I}{V} = 0 \tag{12}$$

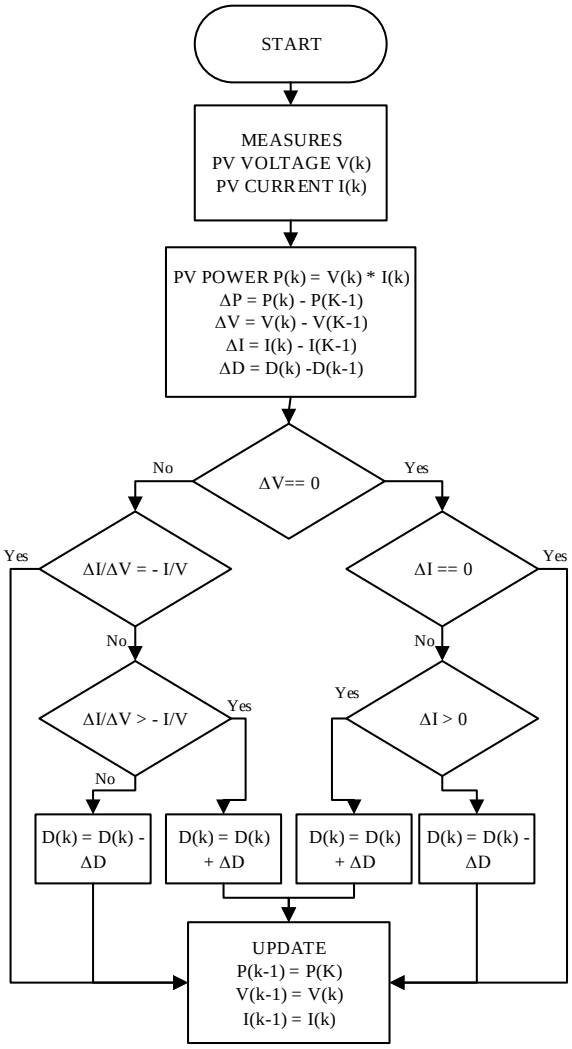

Figure 5. Flow chart of Conventional IncCond Algorithm.

This algorithm measures for each k instant the current $I_{pv}(k)$ and the voltage $V_{pv}(k)$ of the PV-module and calculate the conductance I/V and the incremental conductance dI/dV with these values the algorithm determines the MPP of the PV module in the $P-V$ characteristic as clearly shown in Eq 9 to 12 [23] [22]. During the operating points the algorithm perturb the system and increases the voltage when the sign of the derivative of the power and voltage DP/DV is positive, otherwise, if the sign of the derivative of the power and voltage DP/DV is negative the

algorithm perturbs the system in the opposite direction and decreases the voltage This is expressed by the following equations [24] [25]. The flow chart of the Conventional IncCond algorithm is presented in Figure 5.

$$\frac{dP}{dV} = 0 \; if \; \frac{dI}{dV} = -\frac{I}{V} \; (at\ MPP) \tag{13}$$
$$\frac{dP}{dV} > 0 \; if \; \frac{dI}{dV} > -\frac{I}{V} \; (left\ of\ MPP) \tag{14}$$
$$\frac{dP}{dV} < 0 \; if \; \frac{dI}{dV} < -\frac{I}{V} \; (rigth\ of\ MPP) \tag{15}$$

B. Modified Incremental Conductance algorithm

The conventional IncCond method, cannot track the maximum energy accurately, which cause the energy losses, so to improve this method. The proposed algorithm is designed to increase the tracking accuracy by eliminating steady-state perturbation and preventing the loss of direction toward the MPP. The flow chart of proposed IncCond algorithm is shown in Figureure7. The Eq 16 is used to create two operating areas as shown in Figure 6, where Z is a small value of the step-size. In these two operating areas A and B, the step-size is changed from Small Step (SS) to Large Step (LS) adaptively. In the area A, the condition of Eq 16 cannot be reached, in this case the step-size is sets equal to LS. In the area B, the condition of Eq 12 is satisfied in this case, the step-size is sets equal to SS. In short, the algorithm sets the step-size equal to LS when the system operates in the area A and sets the step-size equal to SS when the system operates in the area B. Another test was added Eq 17 to detect if there are variations in both the irradiation and the load. The program checks continuously this test. If this condition is not verified that means, changes occur in load or solar irradiation. So the algorithm sets again the step-size equal to LS. If this condition is satisfied that means, no variation appears in both load and solar irradiation, the system continues to operate at MPP with step-size equal to SS. The Eq 17 is rarely achieved when it is equal to zero, therefore a small power tolerance is authorized $e = 0.04$.

$$abs\left(\frac{DP}{DV}\right) \leq Z \tag{16}$$
$$\frac{\Delta I}{\Delta V} + \frac{I}{V} = e = 0.04 \tag{17}$$

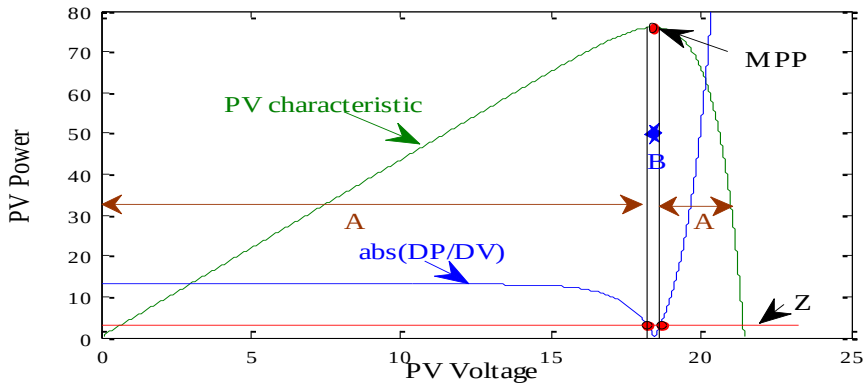

Figure 6. PV power and step vs. voltage with the operating intervals.

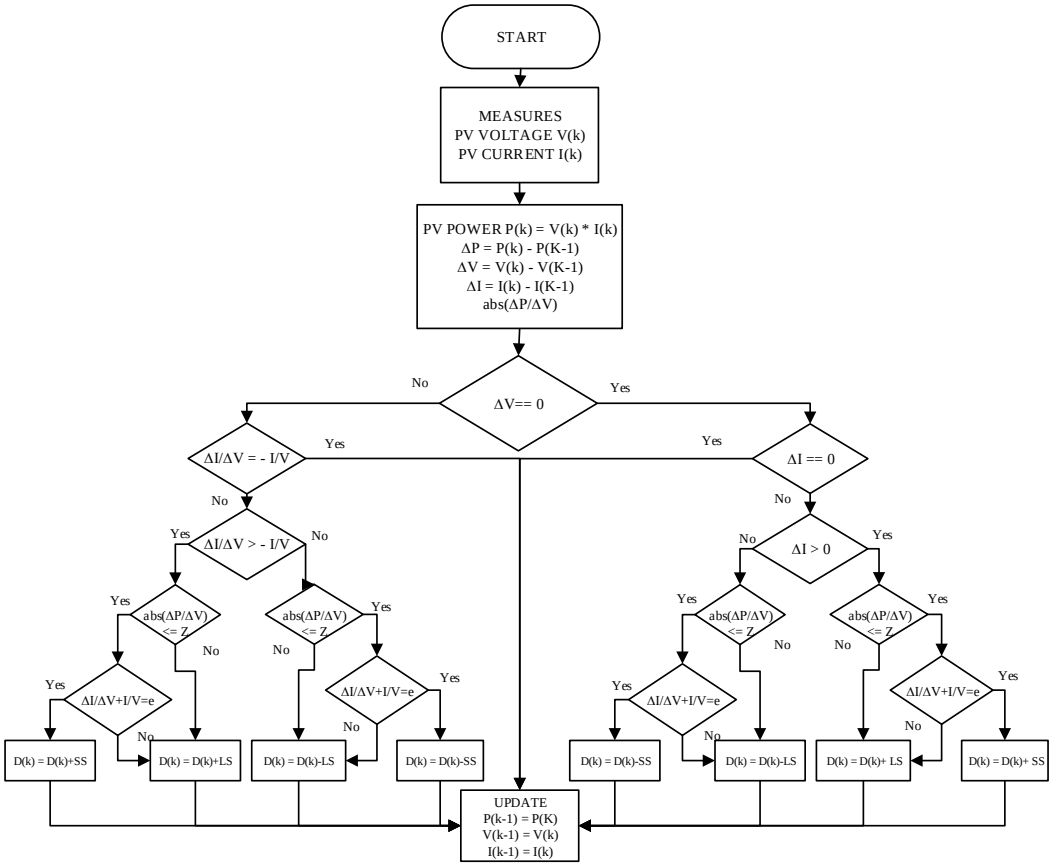

Figure 7. Flow chart of the proposed IncCond Algorithm.

4. Simulation Results

The proposed system has been verified using MATLAB/Simulink environment. The block diagram of the overall MPPT system is shown in Figure 8. The PV module which has been studied in this paper is ISOFOTON IS-75/12 Tab 1. The Conventional IncCond and proposed are simulated under various operating condition. The aim is to compare the two MPPT methods previously mentioned in this paper. These two controllers have been tested under the same operating condition.

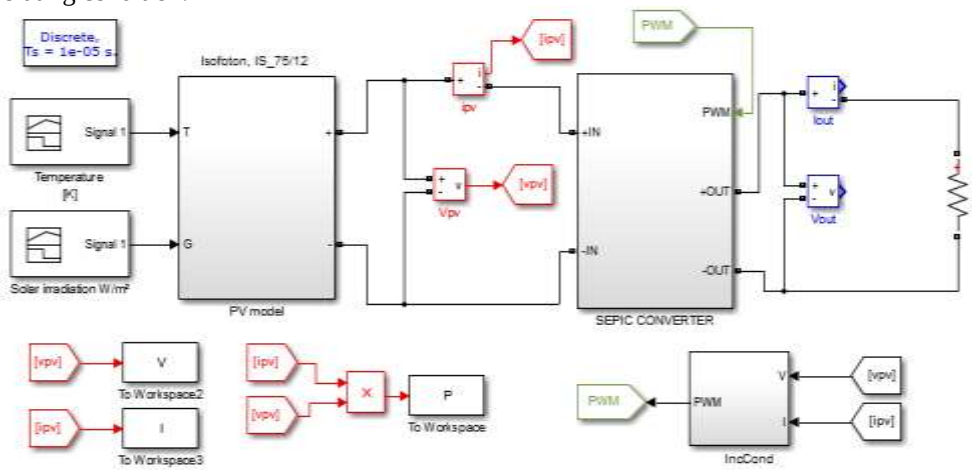

Figure 8. The block diagram of the MPPT system.

A. The MPP-tracking efficiency

The MPP-tracking efficiency of the two techniques is measured under tow test, various types of irradiance Figure 9 and real scenario of solar irradiation Figure 14, using the following expression.

$$\eta_{MPPT} = \frac{P_{MPP}(t)}{P_{MPP*}(t)} \times 100 \quad (18)$$

The average MPP-tracking efficiency is given as

$$\eta_{MPPT} = \frac{\int P_{MPP}(t)dt}{\int P_{MPP*}(t)dt} \times 100 \quad (19)$$

Where, P_{MPP*} is the actual output PV power, which is the objective of the MPPT algorithm. P_{MPP} is the actual extracted power from the MPPT algorithm.

B. Various Types of Irradiance

The aim of this test is to assess both tracking velocity and tracking accuracy under various types of irradiance. The irradiance level is changed from 600 W/m² to 1000W/m² with fast, slow and sudden step changes as shown in Figure 9. The tracking waveforms of power, current and voltage by the conventional and proposed method are given in Figure 10 and Figure 11 respectively. The conventional IncCond technique measures the current and voltage step by step, which needs 0.65 s to finish the tracking process. The proposed method can accelerate the transient tracking time, which takes 0.05 s to reach the MPP. So the tracking velocity of the proposed algorithm is better than the conventional algorithm. When rapidly decrease and increase of solar irradiation (type of sudden step changes), the conventional algorithm drift away from the MPP, which cause both a decrease in the tracking efficiency and energy losses. On the contrary, the proposed algorithm can almost perfectly avoid the drift. The results clearly show that the proposed technique has better performance compared to the conventional technique (faster settling time and never loss of direction), which results in increase in the energy harvested by the PV module. The proposed MPPT controller has a faster response to the change in insolation condition.

The $\eta_{MPPT(avg)}$ was measured for the conventional technique is approximately 97.7 %, its efficiency is low due to both the tracking error of the maximum energy point and losses of direction at sudden change in solar irradiation. For the proposed method, the $\eta_{MPPT(avg)}$ is calculated to 99.48%. So the efficiency of MPPT is increased around 1.78 %. For photovoltaic applications, this improvement is very important because the PV systems have a lifetime of more than twenty years.

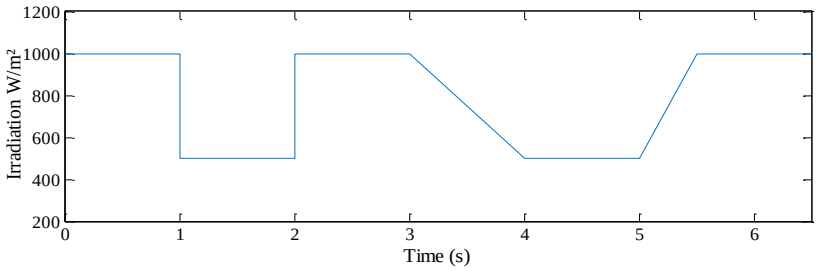

Figure 9. Various types of solar irradiation.

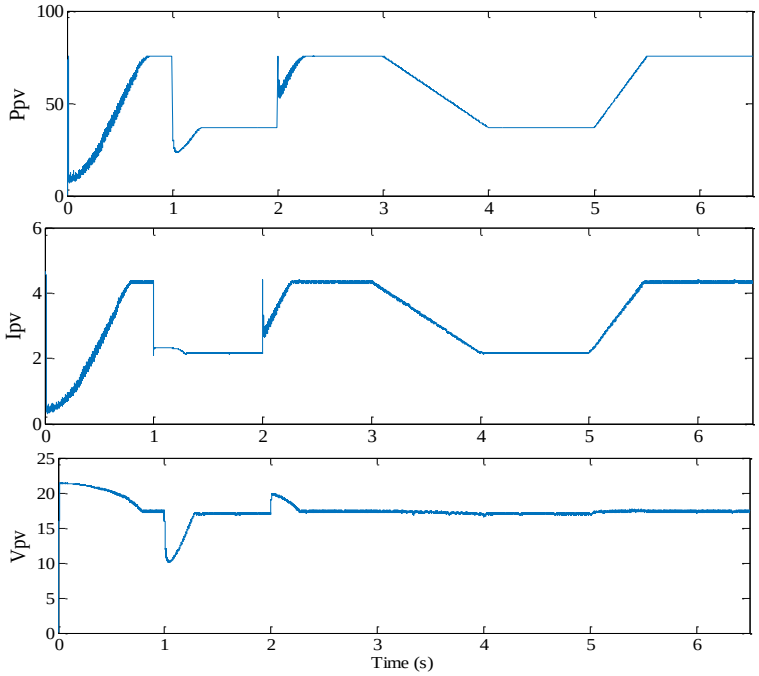

Figure 10. Tracking Waveforms for PV power, current and voltage by the conventional IncCond algorithm.

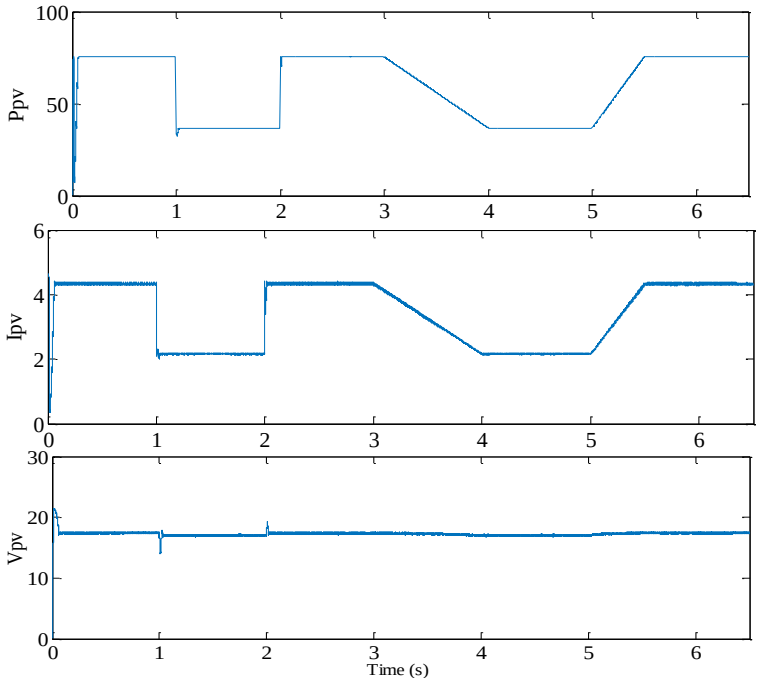

Figure 11. Tracking Waveforms for PV power, current and voltage by the proposed IncCond algorithm.

C. Real Scenario of Solar Irradiation

The simulations presented below were carried out using the measurements collected from a weather database in the city of Adrar (Algeria) Figure 13. This database is stored in the memory of the weather acquisition station. In Figure 14, it is presented the evolution of the irradiation data for part of the chosen day. In order to test the suggested technique under real conditions, the designed converter is applied to supply a fixed load in the city of ADRAR (Algeria). The tracking waveforms of power, current and voltage by the conventional and proposed method are given in Figure 15 and Figure 16 respectively. The conventional IncCond method is very slow to attain the stationary state, which takes 0.07 s of transitory regime. The proposed method accelerates the convergence time, which takes 0.01 s to attain the steady-state. It can be confirmed once again the superiority of the proposed technique in term of tracking speed the PPM.

The $\eta_{MPPT(avg)}$ was measured for the conventional and proposed method is approximately 97.63 % and 99.41% respectively. So the efficiency of MPPT is increased around 1.78 %. The efficiency of the modified algorithm is always superior to the conventional algorithm even in the case of real irradiance data, which confirm high precision tracking of the MPP. After these interpretations it can be said that the proposed method responds sufficiently, promptly and effectively.

To conclude, the application of modified algorithm offers more speed convergence to reach the desired MPP, with less error around the delivered PV panel power. In addition, the proposed MPPT system does not require any additional components; only a modification in the MPPT control program must be integrated.

Figure 13. Photo of the meteorological station of Research Unit in Renewable Energies in the Saharan Medium, Adrar, Algeria

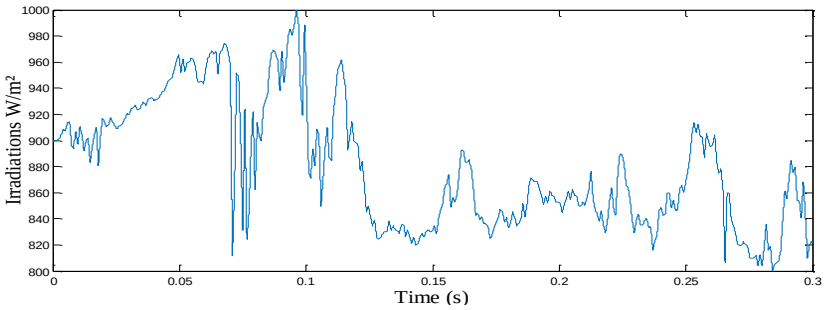

Figure 14. Real Scenario of Solar Irradiation.

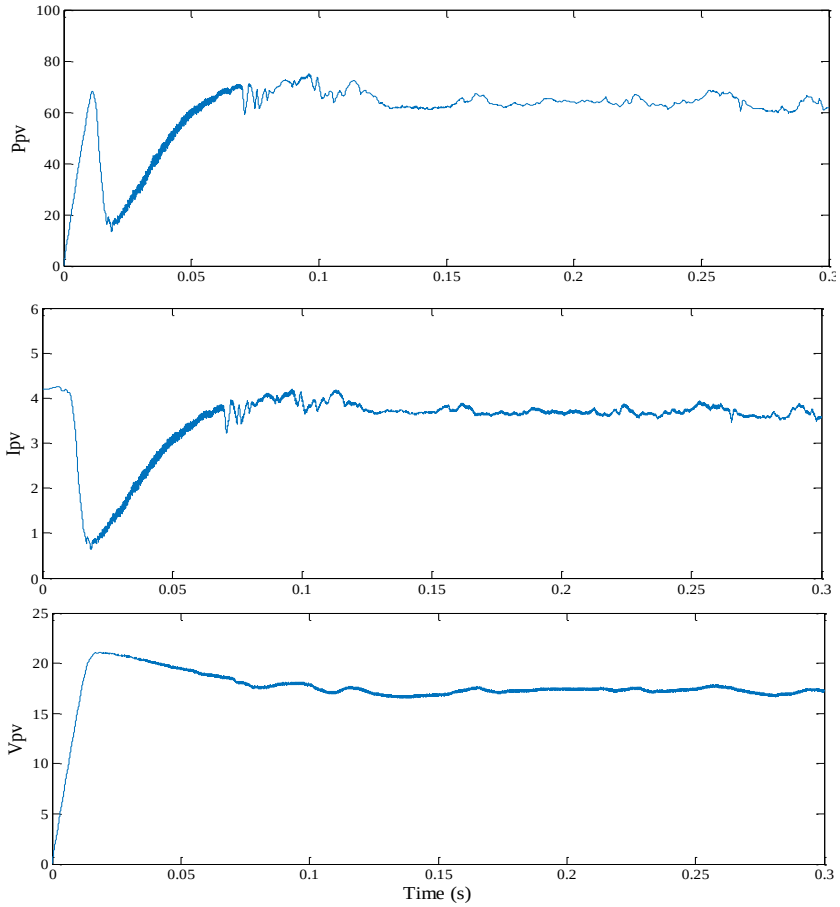

Figure 15. Tracking Waveforms for PV power, current and voltage by the Conventional IncCond algorithm.

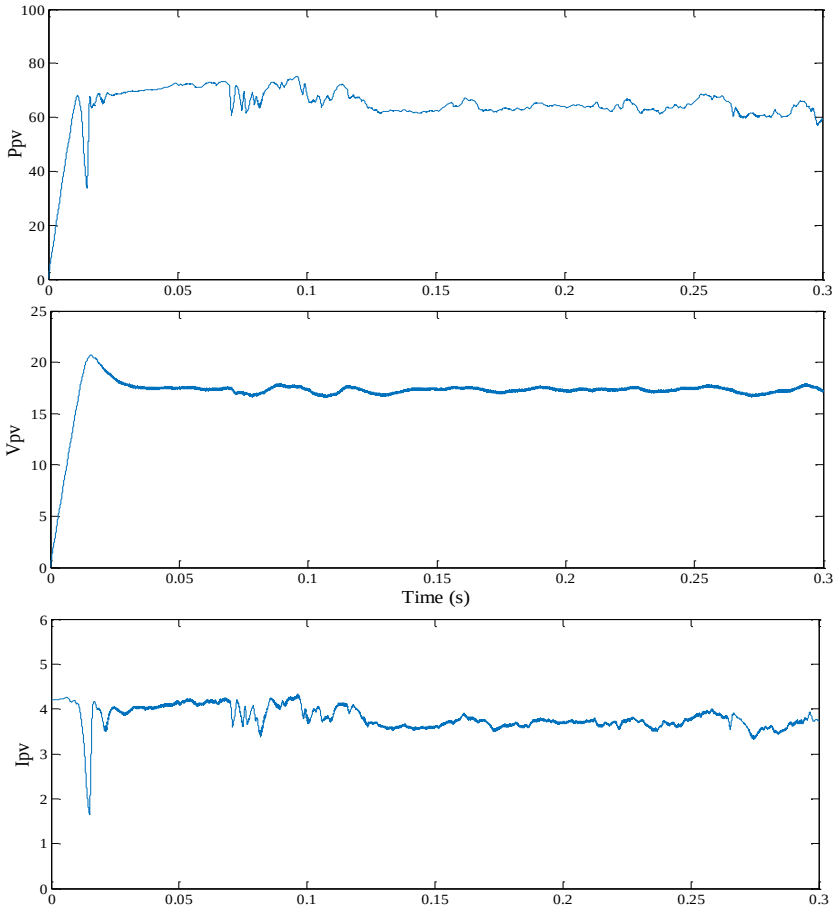

Figure 16. Tracking Waveforms for PV power, current and voltage by the proposed IncCond algorithm.

.

5. Experimental Results

The overall system consists of PV panel, SEPIC converter, PIC16F877A controller, gate drive and the load 30 Ω. The switch of the SEPIC converter is controlled by the duty cycle, so that the operating point of the PV array progresses towards the MPP. The PIC16F877A controller is programmed with conventional IncCond algorithm and the proposed one to generate the fit PWM controlling the duty cycle. Both current and voltage of the PV-module are measured using ACS712 (current sensor) and voltage divider respectively.

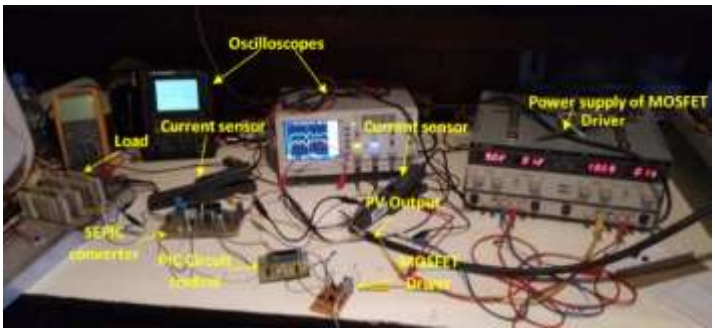

Figure 18. PV System experimental test installed in the Research Unit in Renewable Energies in the Saharan Medium, Adrar, Algeria

Figure 19. PV module installed in the Research Unit in Renewable Energies in the Saharan Medium, Adrar, Algeria

The experimental results were obtained directly under the sun in December 22, 2016 at (11h: 25min and 10h: 52min) as it is indicated in the oscilloscope Figure 22. In that day, the solar irradiance and ambient temperature are (498.97 W/m²; 12.92 ˚C at 11h: 25min and 437.63 W/m²; 11.81 ˚C at 10h: 52min) Figure 20 and 21.

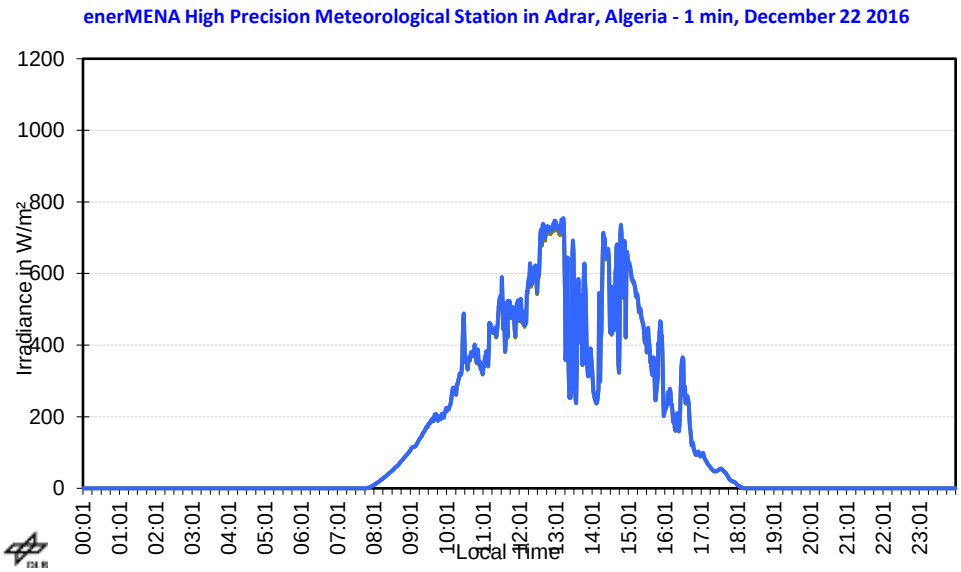

Figure 20. Irradiance measured by the Meteorological Station of Adrar, Algeria

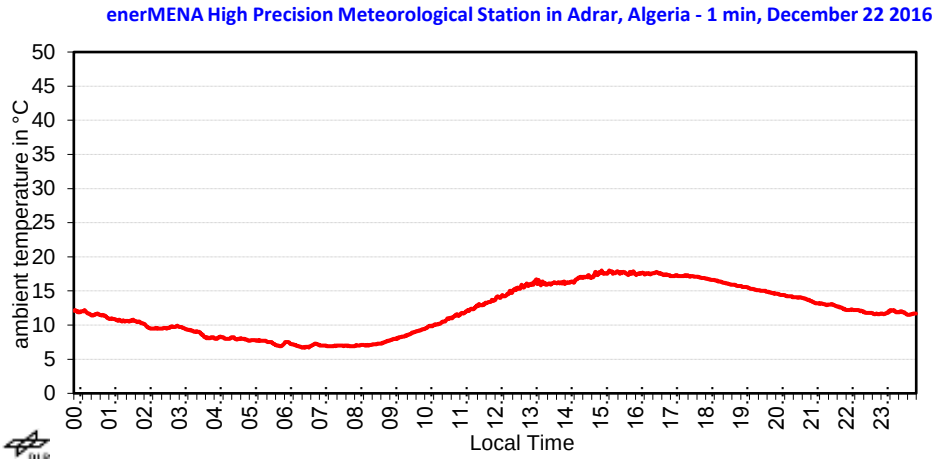

Figure 21. Ambient temperature measured by the Meteorological Station of Adrar, Algeria

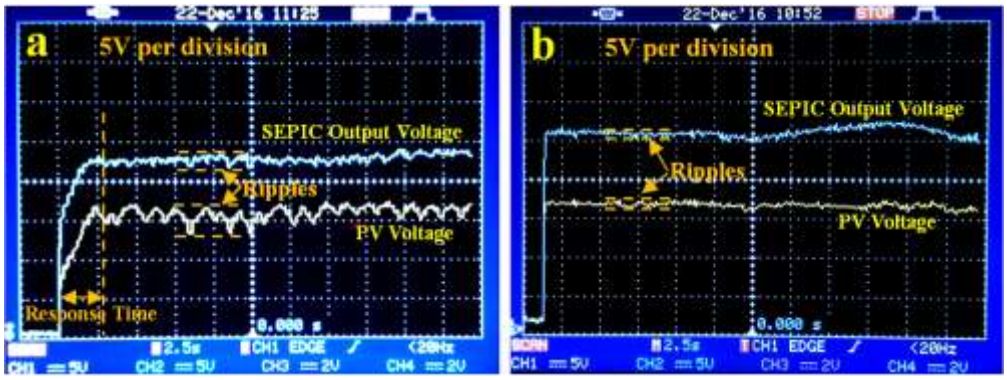

Figure 22. PV Voltage and SEPIC output Voltage: (a) conventional IncCond method (b) modified IncCond method

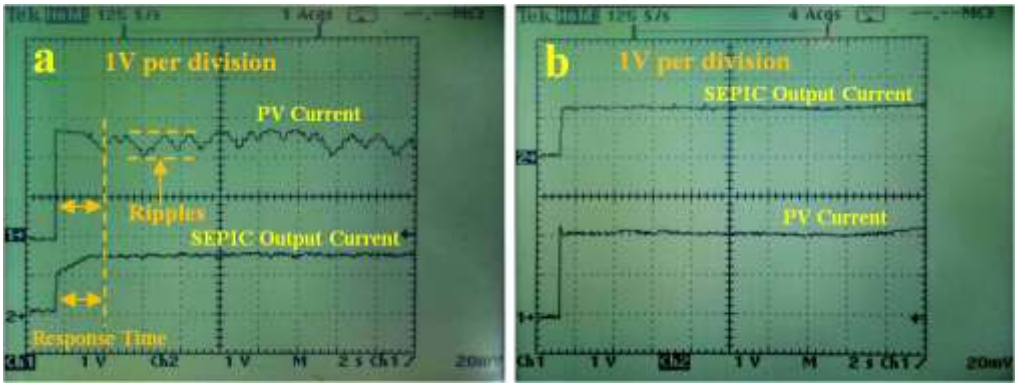

Figure 23. PV Current and SEPIC output Current: (a) conventional IncCond method (b) modified IncCond method

Once the experimental test Figure18 is ready, the simulation results can be validated. The experimental results show clearly that the expected objectives of this paper are reached. The experimental results reveal the effectiveness of the proposal, and also show the tracking speed of

the MPP and reduction of ripples. These improvements are seen in the voltage quality Figure 22. In Figure 23 the proposal allowed less current ripple compared to the conventional IncCond technique. It is observed that the tracking velocity of the conventional IncCond algorithm is too much slow in comparison with the adaptive duty cycle Figure 22. Therefore, the proposal offers more response time and less voltage ripples. So, the application of proposed method, which makes the system respond rapidly with less error around the delivered PV panel power. In addition, no additional components are required, only a modification in the MPPT control program must be integrated.

6. Conclusion

In this paper, a novel MPPT technique has been developed in order to eliminate all the drawbacks of the Conventional IncCond method. The proposed IncCond technique was used to track the MPP for PV module under real Solar Irradiation. The obtained results confirm that: the suggested algorithm can find quickly and accurately the MPP, decreasing the energy losses, increasing the tracking efficiency without increasing the cost of PV system components and improving the energy harvesting to ensure the good use of PV system. In addition, the proposed method can be easily implementable in low-cost and low power conception microcontroller.

7. References

[1]. H. Rezk and A. M. Eltamaly, “A comprehensive comparison of different MPPT techniques for photovoltaic systems,” *Sol. Energy*, vol. 112, pp. 1–11, 2015.

[2]. J. Ahmed and Z. Salam, “An improved perturb and observe (P&O) maximum power point tracking (MPPT) algorithm for higher efficiency,” *Appl. Energy*, vol. 150, pp. 97–108, 2015.

[3]. S. Zhou *et al.*, “A Novel Maximum Power Point Tracking Algorithms for Stand-alone Photovoltaic System,” *Int. J. Control. Autom. Syst.*, vol. 8, pp. 1364–1371, 2010.

[4]. M. A. Eltawil and Z. Zhao, “MPPT techniques for photovoltaic applications,” *Renew. Sustain. Energy Rev.*, vol. 25, pp. 793–813, 2013.

[5]. B. Bendib, H. Belmili, and F. Krim, “A survey of the most used MPPT methods: Conventional and advanced algorithms applied for photovoltaic systems,” *Renewable and Sustainable Energy Reviews*, vol. 45. pp. 637–648, 2015.

[6]. B. Boukezata, A. Chaoui, and J. Gaubert, “An improved fuzzy logic control MPPT based P & O method to solve fast irradiation change problem,” *J. Renew. Sustain. Energy*, vol. 43505, 2016.

[7]. Y. Chen, Y. Jhang, and R. Liang, “ScienceDirect A fuzzy-logic based auto-scaling variable step-size MPPT method for PV systems,” *Sol. ENERGY*, vol. 126, pp. 53–63, 2016.

[8]. S. Messalti, A. Harrag, and A. Loukriz, “A new variable step size neural networks MPPT controller: Review, simulation and hardware implementation,” *Renew. Sustain. Energy Rev.*, vol. 68, no. August 2015, pp. 221–233, 2017.

[9]. H. Boumaaraf, A. Talha, and O. Bouhali, “A three-phase NPC grid-connected inverter for photovoltaic applications using neural network MPPT,” *Renew. Sustain. Energy Rev.*, vol. 49, pp. 1171–1179, 2015.

[10]. A. M. Palaniswamy and K. Srinivasan, “Takagi-Sugeno fuzzy approach for power optimization in standalone photovoltaic systems,” *Sol. Energy*, vol. 139, pp. 213–220, 2016.

[11]. C. Liu, J. Chen, Y. Liu, Z. Yang, and I. Technology, “An Asymmetrical Fuzzy-Logic-Control-Based MPPT Algorithm for Photovoltaic Systems,” *Energies*, pp. 2177–2193, 2014.

[12]. T. Esram and P. L. Chapman, “Comparison of Photovoltaic Array Maximum Power Point Tracking Techniques,” *IEEE Trans. Energy Convers.*, vol. 22, no. 2, pp. 439–449, 2007.

[13]. L. Piegari and R. Rizzo, “Adaptive perturb and observe algorithm for photovoltaic maximum power point tracking,” *IET Renew. Power Gener.*, vol. 4, no. January 2009, p. 317, 2010.

[14]. M. Killi and S. Samanta, "Modified Perturb and Observe MPPT Algorithm for Drift Avoidance in Photovoltaic Systems," *IEEE Trans. Ind. Electron.*, vol. 62, no. 9, pp. 5549–5559, 2015.
[15]. T. P. Sahu and T. V. Dixit, "Modelling and analysis of perturb and observe and incremental conductance MPPT algorithm for PV array using Cuk converter," in *2014 IEEE Students' Conference on Electrical, Electronics and Computer Science, SCEECS 2014*, 2014.
[16]. M. G. Villalva, J. R. Gazoli, and E. R. Filho, "Comprehensive Approach to Modeling and Simulation of Photovoltaic Arrays," *IEEE Trans. POWER Electron.*, vol. 24, no. 5, pp. 1198–1208, 2009.
[17]. N. Femia, G. Petrone, G. Spagnuolo, and M. Vitelli, "Optimization of perturb and observe maximum power point tracking method," *IEEE Trans. Power Electron.*, vol. 20, no. 4, pp. 963–973, 2005.
[18]. S. J. Chiang, H. Shieh, and M. Chen, "Modeling and Control of PV Charger System With SEPIC Converter," *IEEE Trans. Ind. Electron.*, vol. 56, no. 11, pp. 4344–4353, 2009.
[19]. K. S. Tey and S. Mekhilef, "Modified incremental conductance algorithm for photovoltaic system under partial shading conditions and load variation," *IEEE Trans. Ind. Electron.*, vol. 61, no. 10, pp. 5384–5392, 2014.
[20]. P. Sivakumar, A. Abdul Kader, Y. Kaliavaradhan, and M. Arutchelvi, "Analysis and enhancement of PV efficiency with incremental conductance MPPT technique under non-linear loading conditions," *Renew. Energy*, vol. 81, pp. 543–550, 2015.
[21]. T. Radjai, L. Rahmani, S. Mekhilef, and J. P. Gaubert, "Implementation of a modified incremental conductance MPPT algorithm with direct control based on a fuzzy duty cycle change estimator using dSPACE," *Sol. Energy*, vol. 110, pp. 325–337, 2014.
[22]. K. S. Tey and S. Mekhilef, "Modified incremental conductance MPPT algorithm to mitigate inaccurate responses under fast-changing solar irradiation level," *Sol. Energy*, vol. 101, pp. 333–342, 2014.
[23]. N. E. Zakzouk, A. K. Abdelsalam, A. A. Helal, and B. W. Williams, "Modified variable-step incremental conductance maximum power point tracking technique for photovoltaic systems," in *IECON Proceedings (Industrial Electronics Conference)*, 2013, pp. 1741–1748.
[24]. S. B. Kjær, "Evaluation of the hill climbing and the incremental conductance maximum power point trackers for photovoltaic power systems," *IEEE Trans. Energy Convers.*, vol. 27, no. 4, pp. 922–929, 2012.
[25]. K. S. Tey and S. Mekhilef, "Modified incremental conductance MPPT algorithm to mitigate inaccurate responses under fast-changing solar irradiation level," *Sol. Energy*, vol. 101, pp. 333–342, 2014.

Salah NECAIBIA was born in Annaba Algeria. He received Master Degree in Electrical Engineering from University of Badji Mokhtar-Annaba, Algeria, in 2015, and the PhD degree in electrical engineering from University of Badji Mokhtar-Annaba, Algeria, in 2018. His research interests are in renewable energy system, and power electronics.

Mounia Samira KELAIAIA was born in Annaba Algeria. She received Dipl.-Ing. Degree in Electrical Engineering in 1993, and the PhD. degree in electrical engineering from University of Badji Mokhtar-Annaba, Algeria, in 2007. Currently, she is an associate professor at electrical engineering department of University of Badji Mokhtar-Annaba, Algeria since 2014. Her research interests are in the power quality, renewable energy, and multilevel inverters

Hocine LABAR was born in El Kala Algeria. He received Dipl.-Ing. Degree in Electrical Engineering in 1991, and the PhD. degree in electrical engineering from University of Badji Mokhtar-Annaba, Algeria, in 2004. He is Scientific Committee Chairman of the Department 2005 up to 2010.Director of Laboratoire d'Electrotechnique d'Annaba up to now. Currently, he is a full professor at electrical engineering department of University of Badji Mokhtar-Annaba, Algeria since 2011. His research interests are in the power quality, renewable energy, and multilevel inverters.

Ammar NECAIBIA was born in Guelma Algeria. He received the State Engineer degree in Automatics from University of Badji Mokhtar-Annaba, Algeria in 2007 and the Magister degree in Electrical Engineering from Annaba University, Algeria in 2009 and the PhD degree in electrical engineering from University of "20 August 1955" Skikda, Algeria, in 2016. He is Researcher, in Research Unit on Renewable Energy in Middle-Saharan Adrar, Algeria. His research interests are in the Fractional order Control, Adaptive Control, Robust Control, Renewable Energy and Photovoltaic Conversion.

Okba DJELAILIA was born in Tebessa Algeria. He received Master Degree in Electrical Engineering from University of Badji Mokhtar-Annaba, Algeria, in 2016. He is attending his PhD from the department of Electrical Engineering, University of Badji Mokhtar-Annaba, Algeria Since 2016. His research interests are in renewable energy system, energy management, micro grid, and power electronics.

Faycel MERAD was born in Annaba Algeria. He received Master Degree in Electrical Engineering from University of Badji Mokhtar-Annaba, Algeria, in 2016. He is attending his PhD from the department of Electrical Engineering, University of Badji Mokhtar-Annaba, Algeria Since 2016. His research interests are in concentrator solar power system, power electronics, renewable energy system, and energy management.